EN

2N Lift1

Comunicator for Lifts

Brief Manual

Issue 2, Version 2

www.2n.com

Sortiment

Part No.	Description
919640xx	Basic model for mounting below the panel
919618xx	Model with the front panel
919630xx	Model in metallic case for mounting on the lift cabin roof

Extending modules

Part No.	Description
913648E	**Universal switch** – DTMF remote control (during connection). One switch module can only be mounted.
919649E	**Lift blocking module –** Special switch, which enables the lift to be blocked at a phone line failure. One blocking module can only be mounted.
919650E	**Amplifier module** – for increasing volume in noisy environment
919621E	**Induction loop** – for persons with hearing aid, includes a self-adhesive holder and 1 m cable.
919680E	**Programming tool –** interconnects Lift1 with the 2N Service Tool on the PC for programming.

Description

2N Lift1 (hereinafter referred to as Lift1) is designed for calling to predefined phone numbers. It is usually used for emergency call from lift to the control centre or to the person who takes care of the lift. A PSTN or alternative (PBX, GSM gateway) line is used for connection with the control centre.

The basic version is dedicated for mounting behind the lift panel, there must be welded screws or holes for mounting. The speaker, microphone and indicating LEDs can be mounted to the front panel of the device or can be delivered separately with cables to be mounted anywhere on the lift panel according the design (cable version). Model with the cover panel includes the front, visible cover, this cover overlaps borders of the mounting hole. It doesn't need exact mounting holes and the design of the space for speaker and microphone is solved. The model in metallic case is good solution for the mounting on the roof of lift cabin.

For mounting on the top of the cabin surface is designated the 2N Lift1 Compact version, in robust metal cover, which includes all parts needed for function including the alarm button. The description is not part of this manual, for information contact the producer.

Operation

Press the ALARM button to activate connection. The "Wait" pictogram goes on immediately and the "Connection established" symbol goes out when communication has been set up. You can use automatic dialing of up to six pre-programmed numbers. Communication is accompanied by factory announcements and/or user recorded lift ID messages.

Service and Operating Staff Instructions

In the Automatic Dialing with Confirmation mode – default settings:

DTMF charter:	Function
1	**Confirm** to Lift1 that the call was successful. Lift1 shows the connection by appropriate pictogram, mutes the currently played announcement and allows the call till time limit is exhausted.
2	**Mute** the actual automatic announcement.
3	**Play** the user message for lift identification, if stored in Lift1.
4 or *	**Extend the call** by 30 seconds. Can be used repeatedly.
5 or #	**Terminate** the call.
6	**Identification sending** for LiftManager

7 až 9, 0	**Switch operating** keyword for switch must start with this numbers.

Before you start

Installation Conditions

- Lift1 is not intended for outdoor applications.
- As the product is connected to a telephone line and may thus produce life-endangering voltage, follow the safety precautions – refer to **Safety Precautions**.
- Never connect Lift1 to a line in parallel with another terminal device.
- Make sure that the lift wall is perfectly flat.
- Make sure that the lift cabin installation is in compliance with the applicable lift standards.

Tips

- Use a portable phone to make sure that the telephone line works.
- Make sure that you know the telephone line number to make a test call.

Mounting

The basic model of Lift1 is designed for mounting to the lift panel from back side. Four 58x122 mm spot-welded M4 screws or other method using the holes in the corner of the device should be used for fixing. There must be sufficiently perforated speaker area, the perforation may never exceed the panel size to avoid acoustic fault. There shouldn't be space between the lift panel and the cabin or the gap must be sealed properly to eliminate acoustic fault of the speaker and acoustic feedback between the speaker and microphone. In front of the microphone must be the hole in the panel, recommended diameter is 2 mm or appropriate perforation. When the LED indicators on the device are used, in front of them must be proper apertures, in this case the model with lightguides is suggested for better performance.

The cable version of the communicator has the speaker, mike and led indicators connected by cables, allowing placement according installer needs.

The model with the front panel is necessary to cut out she space in the cabin to insert the unit, the front panel covers the hole, it is fixed by two screws.

For light indication can be used LED indicators in the unit, external LEDs delivered with the cable version or indicators build-in by the lift producer. For these external indicators can be used switches integrated in the device, these switches are electrically separated from the phone line. External power is in this case necessary.

All described types of Lift1 uses external button Alarm, which is not part of the delivery and must be connected to the device. Input Cancel can be used for canceling of the activated alarm before the call is established. Inputs Alarm1 and Cancel can be configured, the positive or negative logic can be set and electrical separation is available. Input Alarm2 can be used as additional input for alarm activation or for end of alarm signaling activated by operating personnel.

Details are described in chapter "Mounting" in user manual. Please read carefully the part "Safety caution" below!

Mounting Drawing for basic model of Lift1

Mounting holes, four M4 spot-welded screws from shaft side recomended

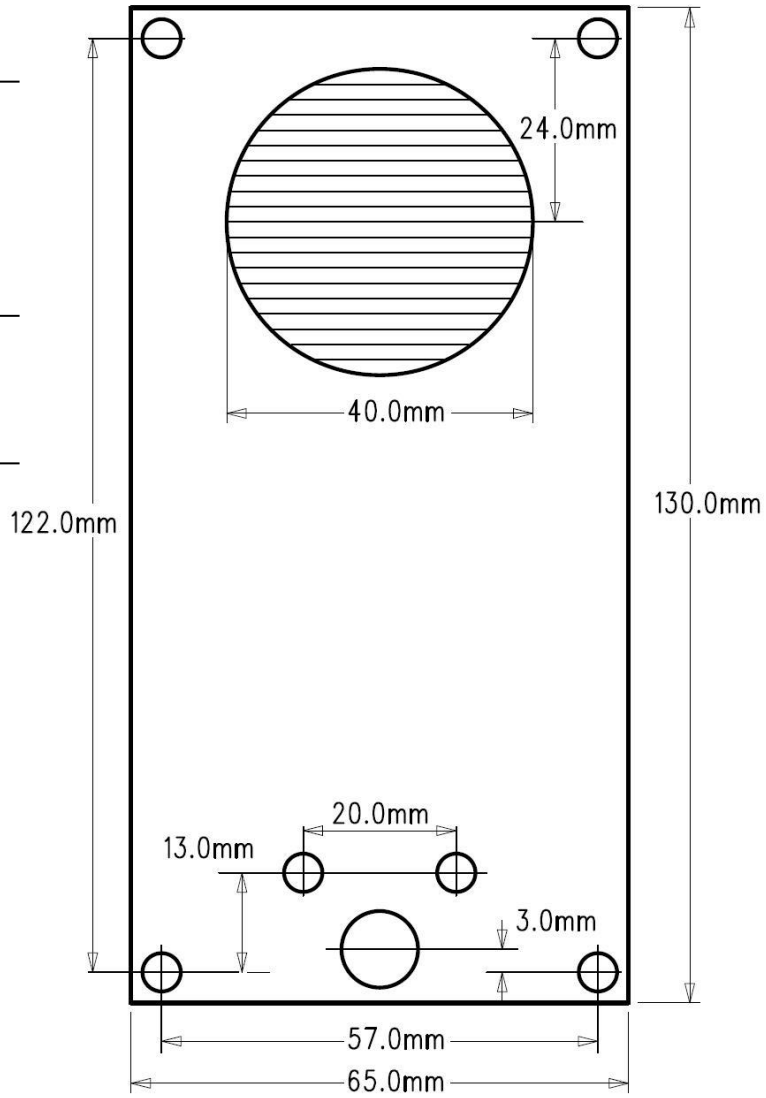

Perforated speaker area, in the cabin wall must be the perforation for good sound quality, the perforated area must not exceed the Lift1 panel

Two optional LED holes, when these LEDs are used, model with lightguides is suggested for better performance

Space for microphone, hole or perforation in the cabin wall is necessary

Safety caution

- The terminals Cancel and Alarm1 with contact control, Alarm2, Phone line, connectors for external LEDs supplied from Lift1, external microphone, external speaker, induction loop, VAS Alarm, programming connector and the board with electronics are connected to a telephone line where life-endangering voltage may occur. Connected switches, LEDs and other parts must be installed with minimum isolation distance 1.5 mm and the minimum breakdown voltage 1500 V. This applies to the switches itself too!
- The DC controlled terminals are separated from the telephone line and do not have to meet the isolation requirements mentioned above.
- Make sure that the cables cannot get in contact with sharp edges during installation to avoid insulation damage. Check the minimum isolation distance of 1.5 mm after installation using an isolation meter if possible.
- The manufacturer shall not be held liable for any installations made in conflict with these instructions.

Electrical Installation

Terminals description

Connector / Name		Description	
ALARM1 Terminal	**DC** = voltage control *)	12–24 V DC, any polarity, activation by signal or no signal state possible	Alarm call activation
	contact control	normally open or normally closed contact	

ALARM2 terminal	contact control	Normally open contact only	Alarm 2 call or end of rescue mode
CANCEL terminal	**DC** = voltage control *)	12–24 V DC, any polarity, activation by signal or no signal state possible	Alarm call deactivation upon door opening
	contact control	normally open or normally closed contact	
Indicator terminals *)		Indicators (illuminated pictograms) up to 24 V / 2x 200 mA, externally supplied, wiring diagram must be maintained	
Connectors for external LED supplied from Lift1		Exteral LED connected to phone line – se the Safety caution	Supplied with cable version of Lift1
Connector for external microphone		External microphone, to be placed according installer needs	Supplied with cable version of Lift1
Connector for external speaker		External speaker, to be placed according installer needs	Supplied with cable version of Lift1
Connector for induction loop		Induction loop for person wit hearing aid	Accessory equipment
Connectors **VAS ALARM1** **VAS ALARM2**		For Voice Alarm Station connection, only one of them can be used concurrently	Activates Alarm1 or Alarm2 according used connector
PROGRAMMIG CONNECTOR		USB programming tool for 2N Service Tool via PC	configuration, firmware, voice menu
Jumper Recovery mode – accessible after cover replacement		Set the jumper to ON to activate the recovery mode for FW upgrade whenever a problem occurs with the Lift1 – 2N Service Tool connection.	
Switch contact *)		The switches are used for variable purposes and are remotely DTMF-controlled. The switches are not designed for 230 V! Switch or lift blocking contact can be used.	
Lift blocking contact *)		The contact opens whenever a phone line failure occurs. It allows signaling or lift blocking.	
Power for amplifier *)		Amplifier module needs external power source	

*) These terminals are safely electrically isolated from the telephone line.

The ALARM1 terminal block helps activate alarm calls.

The ALARM2 terminal block can be used for alarm to different set of numbers, especially with Voice alarm station, or for end of alarm setting. Only isolated switch with normally open contact can be used.

The CANCEL terminal block helps deactivate an active alarm when the door opens. Therefore, set parameter 914 to a value higher than the maximum lift travelling time.

For the Alarm 1 and Cancel input can be used switch button both with normally opened or normally closed contacts, isolated. The isolated voltage inputs can be activated by any voltage from 12 to 24 V. The logic of inputs is to be set by parameters (920 for Alarm 1, 916 for Cancel).

Terminals for externally supplied indicators are dedicated for connecting any indicators (illuminated pictograms). These terminals are safely electrically isolated from the phone line, the user can connect any indicator. The used voltage is 12 V, eventually 24 V. It is necessary to keep the polarity of indicators. Maximal current of the indicator is 200 mA. When you connect external power source, the internal LEDs can be active even when the line is on hook, it allows to support standards (permanent signalization till rescue is done, line failure signaling). See the wiring diagram for external indicators below.

Plugs and connectors on the bottom side of Lift1

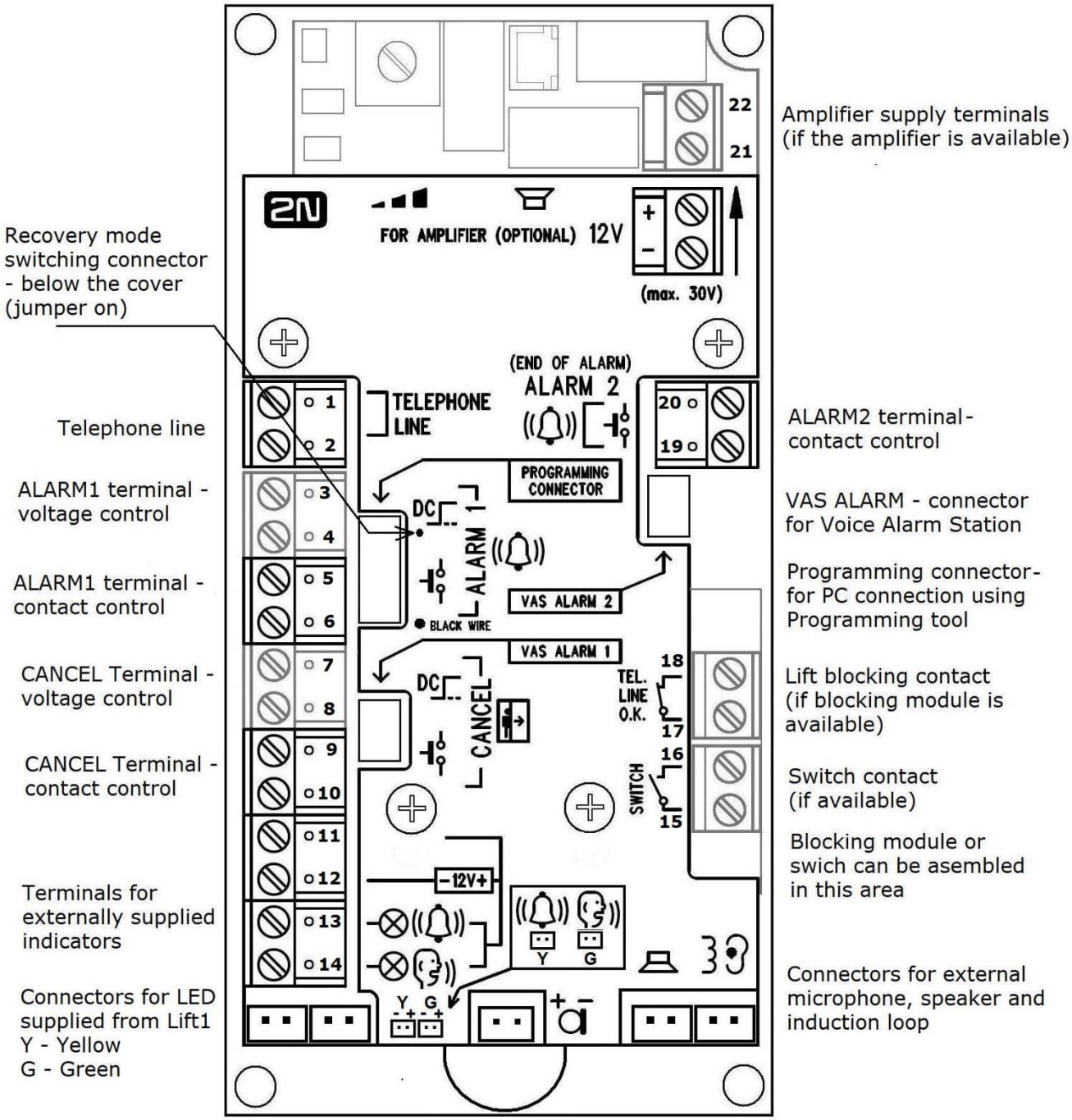

Connectors for external LED supplied from Lift1 and connectors for external microphone and speaker can be used for connecting of these parts on cables, allowing the user to place it according the construction of the lift cabin. These parts are delivered with the cable version of Lift1. These parts must be isolated for minimum breakdown voltage 1500 V (see the safety caution). Induction loop is the Accessory equipment for persons with hearing aid, it can be used only in very short distance from the loop. When the whole lift cabin should be covered with signal, amplifier for induction loop must be used, for more information contact producer.

There is possible to equip Lift1 with universal switch remotely DTMF-controlled or by Lift blocking module to block the lift function during telephone line failure. The Amplifier module is accessory equipment for increasing volume in noisy environment, it needs external supplying and it is electrically separated from the power line.

Wiring diagram for externally supplied indicators

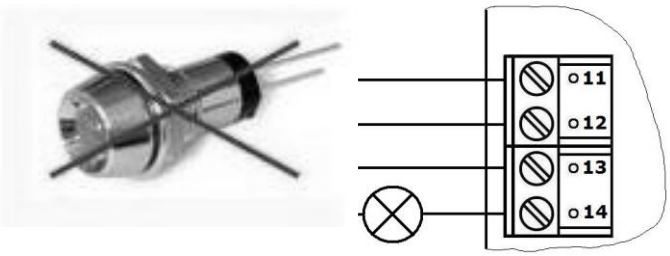

Don't use LED holders, which are not isolated for 1500 V for LEDs supplied from Lift1!

Note

- Use 12–24 V DC of any polarity for voltage control. However, make sure that the source is backed up against power outage. You can also connect a buzzer or horn in parallel with the ALARM terminal if voltage control is used.

- You can also use the NO contact or voltage presence for Alarm1 and Cancel activation and invert the function using parameters 920 or 916 if necessary – NC contact or voltage absence for activation. The logic of the Alarm1 functionality can be set automatically when the device is first time switched on, the input has to be in not active alarm state.

- Make sure that the DoorOpen signal is only activated when both the internal and external lift doors are open and the people can leave the cabin safely.

Telephone Line Connection

Lift1 works regardless of polarity and/or line parameters in a wide range (see the Technical Parameters section). It is connected via the LINE terminals. A great advantage is that Lift1 requires no additional power supply for operation. For details on Lift1 connection to PSTN, PBX and GSM gateway lines refer to the Lift1 Connecting Options section.

Lift1 Programming

Before you start

- Make sure that your phone supports tone dialing.
- Complete all the values to be modified into a pre-prepared form, which provides a clear table of basic functions.
- If your Lift1 is not brand new, make sure that you have the correct service password and, if you are not completely sure of your Lift1 configuration, execute full initialization (Warning: The service password will also be initialized!).

Access to Programming Mode

You can only enter the programming mode during an incoming call (from a phone to Lift1). Enter the access password:

[*] **service password** [*] (remember to enter an asterisk in front of and behind the password!)

If the password is correct and programming is enabled (jumper), Lift1 announces:

„You have entered the programming mode"

and displays a Help according to the context. The default password is 12345 and you are recommended to enter a different password to protect your device against unauthorised persons.

Tips

- If you forget your service password, use the programming tool and PC with 2N Service Tool.
- While entering the password, keep a timeout of 5 seconds (or any other value in the range between 1 and 9) for each character to avoid Lift1 hang-up and password/parameter re-entering.

Programming Procedure

Having entered the programming mode, you can change any programmable value(s) in any order. Proceed as follows: enter the parameter number and value. Use an asterisk as a separator or Enter. In general, the function has the following format:

Parameter number ✱ value ✱

The parameter number has three digits (see the table). After you enter the number and an asterisk, Lift1 shall report the number/name, current value and potential range of the parameter to be programmed. After you enter the value and another asterisk, Lift1 shall announce "New value stored", or "Invalid value" if the value is beyond the allowed range.

Programming Error

- If you make a mistake while entering a number (function or value) and find it before clicking the asterisk, press # to cancel the whole number and enter a new one.
- If Lift1 rejects a parameter number or value, you can go on programming – enter the function number although you typed a wrong value.
- If you have programmed and saved a wrong value, re-enter a correct value.

Programming End

- Having saved all the values to be modified, press # to make Lift1 send an on-hook signal and hang up.
- If you do not press #, Lift1 will hang up later without affecting the value saving process (the values are stored immediately in the memory).
- If you are not quite sure of how Lift1 will behave after programming, check the functionality.
- Save the filled-in form for later check.

Tip

- Refer to the full User Manual for message recording, acoustic parameter setting, switch programming and Lift1 Programming Tool details.

Lift1 – Brief Programming Form

Parameter number and name	Range of values	Default value	Notes, explanations	Your value
011 – ALARM button memory 1	up to 16 digits	empty	Enter ✱ , # and '**p**' for a 3-second pause while programming via the 2N Lift1 Service Tool or using parameter 017. (Refer to the full User Manual).	
012–016 - ALARM button memories 2-6	up to 16 digits	empty		
071 – Check call memory 1	up to 16 digits	empty		
072–076 – Check call memories 2–6	up to 16 digits	empty		
018 – Count of automatic dialing cycles for ALARM	0–9	3 cycles		

078– Count of automatic dialing cycles for check call	0–9	3 cycles		
111 – Automatic dialing type for ALARM button memory 1	1–6	1	1 = loud with confirmation 2 = silent with confirmation 3 = loud without confirmation 4 = CPC Antenna support 5 = CPC Kone support 6 = P100 support	
112–116 – Automatic dialling type for ALARM button memories 2–6	1–6	1		
171 – Automatic dialing type for check call memory 1	1–6	1	1 = loud with confirmation 2 = silent with confirmation 3 = loud without confirmation 4 = CPC Antenna support 5 = CPC Kone support 6 = P100 support	
172–176 – Automatic dialing type for ALARM button memories 2–6	1–6	1		
871 – Message repeating count	0–9	3	ere is a 5-second space between two announcements.	
872 – Message recording	0–30 s	empty	er announcement recording function, can be used for lift identification.	
875 – Message options	2 digits	55	: **digit =** message that is repeated after number dialing **2nd digit** = message that is played after connection confirmation and call end The meanings of the digits are as follows: 1 = play user message recorded via parameter 972 2 = read identification – parameter 974 3 = combine options 1 + 2 4 = send identification by DTMF 5 = message as specified in parameter 977 (after confirmation according to parameter 976) 6 = combine options 5 + 2 7 = confirmation tone (after confirmation only)	
876 – End-of call message language selection	0–99	1	0 = ♪♪ 1 = Default product version language 2 = English 3 = French 4 = German 5 = Spanish 6 = Polish	
877 – Outgoing call message	0–99	1		

language selection			7 = Czech 8 = Portuguese 9 = Dutch 10 = Slovak 11 = Russian 12 = Turkish 13 = Italian 14* to 99 = silence *14 = Latvian (in the English product version only) e: Position 1 includes the Chinese language in the Chinese product version.	
912 – Maximum call time	15–990 s	120 s	e the call-extending command to extend the call (DTMF 4 or *).	
913 – Login time limit (for automatic dialing)	10–990 s	60 s	t the maximum period of time for the control centre staff to answer the call and send confirmation, otherwise Lift1 hangs up and dials the next number. Counted from the end of dialing.	
914 – Delayed call	0–1000 s	0 s	plied only if the CANCEL input is connected.	
916 – Cancel input inversion	0-1	0	0 = contact closed or voltage present at opened door 1 = contact opened or voltage not present at opened door	
920 – Alarm button mode	0-2	0	0 = normally open contact or voltage present to activate 1 = normally closed contact or voltage not present to activate 2 = autodetection, during the next boot of the device the state of the input will be set as not active state.	
962 – Minimum button pressing time	100–9999 ms	100 ms	plies to the ALARM button.	
965 – Private mode	0–25	0	coming call permitted always during rescue process. Parameter specifies functionality when the rescue process is not active: 0 – incoming call permited during rescue process only. 1 – 24 – time after alarm, when incoming call is permitted (hours) 25 – incoming call is always enabled	
966 – Rescue process	0-4	0	0 = disabled 1 = End of rescue process by Alarm 2 2 = End the rescue process by rescue password 3 = End the rescue process by Alarm 2 or the rescue password 4 = Special customer modification	

974 – Lift identification	16 digits	empty	Numerical lift identification	
981 – Check call	0–6	0	Setting options for parameter 981: 0 = disabled 1 = enabled, first call in 3 minutes and then as set in parameter 983 2 = enabled, first call in 2 hours and then as set in parameter 983 3 = enabled, call as set in parameter 983 4 = enabled, call on the nearest day set in parameter 986 5 = enabled, first call in 3 minutes and then as set in parameter 986 6 = as set by the server	
982 - Check call interval	00:00:00 – 23:59:59 beginning and end	beg.: 00:00:00 end: 23:59:59	Set announcements for the lower traffic (lower tariff) time, generated at random in the set time interval.	
983 – Check call period	0–100 days	3	Count of days for check call repetitions	
984 – Time setting	hhmm	NA	Read the current value and set a new one. The audio unit may not be disconnected from the telephone line after setting.	
985 – Data setting	yymmdd	NA		
986 – Days of week for check call	0000000 – 1111111	0000000	Values for Mon, Tue, Wed, Thu, Fri, Sat, Sun: 0 = do not call 1 = call	
991 – Service password	up to 16 digits	12345	Change the default programming password for access to the programming mode via a voice menu and for full initialisation.	
992 – Rescue password	up to 16 digits: 0–9	empty	Set the rescue terminating password.	

Technical parameters

Electrical Parameters

Parameter	Value	Condition
Minimum line current	15 mA	off-hook
Minimum line voltage	22 V	on-hook
Off-hook DC voltage drop	< 8 V < 16 V	I = 25 mA I = 50 mA
On-hook resistance	>1 MΩ	U = 25..100 V
Off-hook impedance	220 Ω + 820 Ω paral. 115 nF	15 to 60 mA
Return loss	> 14 dB	15 to 60 mA
Bandwidth	300 až 3500 Hz	15 to 60 mA
Ringing impedance	> 2 kΩ C = 0,47 µF	25 to 50 Hz
Ringing detector sensitivity	10 až 20 V	25 to 50 Hz
Pulse dialling	40 / 60 ms	
DTMF dialling level	-9,0 +2,0/-2,5 dB and -11,0 dB +2,5/-2,0 dB	15 to 60 mA
Overvoltage protection – between A, B	1000 V	8 / 20 µs

Other Parameters

Dimensions	65 x 130 x 24 mm
Working temperature range	-20 to +70 ˚C

Note

- Lift1 is certified for connection to a wired PSTN line according to the ES 023 021 requirements.
- The product does not contain components harmful to the environment. When the product's service life is exhausted, dispose of it in accordance with the applicable legal regulations.

EC Declaration of Conformity

Hereby, 2N TELEKOMUNIKACE a.s. declares that the equipment type **2N Lift1** is in compliance with directives 2014/35/EU, 2014/30/EU, 2014/33/EU and 2011/65/EU. The full text of the EU declaration of conformity is available at the internet address www.2n.com/declaration.

2N TELEKOMUNIKACE a.s.
Modřanská 621, 143 01 Praha 4, Česká Republika
Tel.: +420 261 301 111
E-mail: sales@2n.com
Web: www.2n.com

2271v2.1